SICA

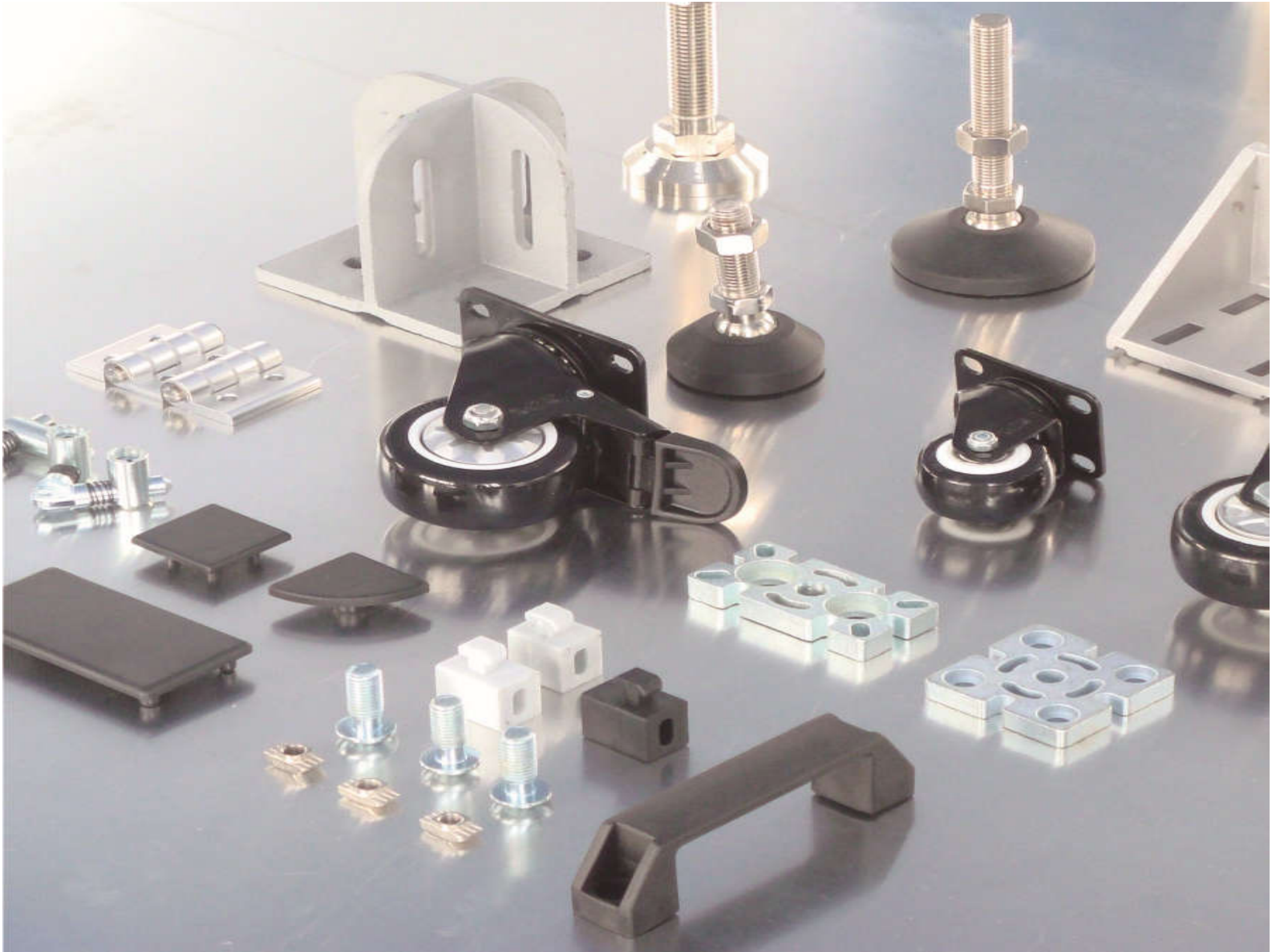

CONNECTING ELEMENTS 90 Degrees

SICA

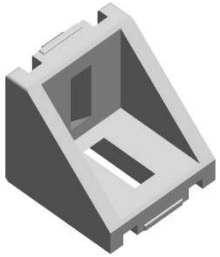

Die Cast

Aluminum Angle

Hidden Bracket

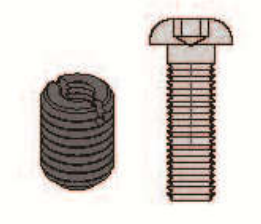

QUICK INSERT SET

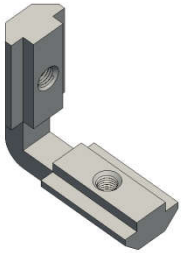

Joint Angle

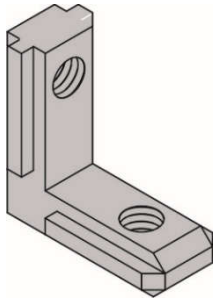

Inner Joint Angle

Anchor Connector-U

Anchor Connector-S

3 way joint

CONNECTING ELEMENTS

SICA

One Way Anchor Connector

ANGULAR CONNECTORS

Two Way Anchor Connector

Inserts and Taps

Insert

Core Reducer

Taps

PARALLEL CONNECTORS

Joint bar

Die Cast Bracket

Material : die cast aluminium alloy

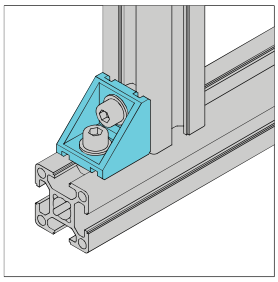

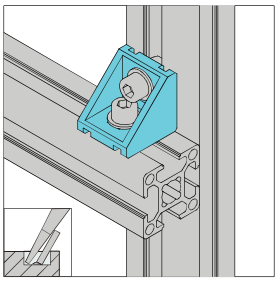

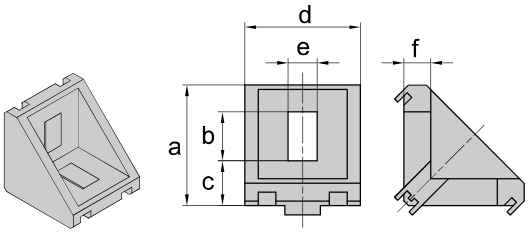

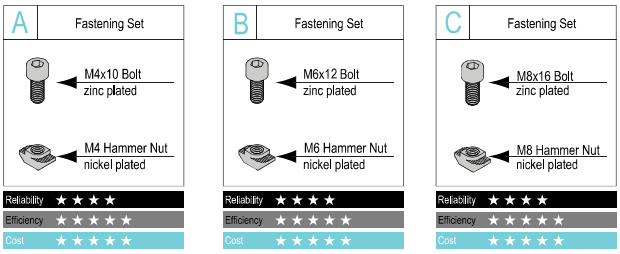

	Size						Fastening Set	Mass (g)	Part No.
Description	a	b	c	d	e	f			
Die Cast Bracket PG20- 2020	25	8	8,5	19	5	8	A	21	06.DCB.2020
Die Cast Bracket PG30- 3030	27	11	10	26	6.5	6	B	21	08.DCB.3030
Die Cast Bracket PG40- 4040	36	15.5	14.5	36	8.5	8	C	50	10.DCB.4040

Die Cast Bracket

Material : die cast aluminium alloy

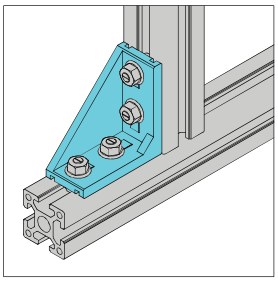

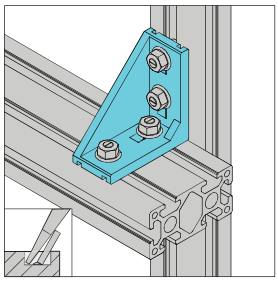

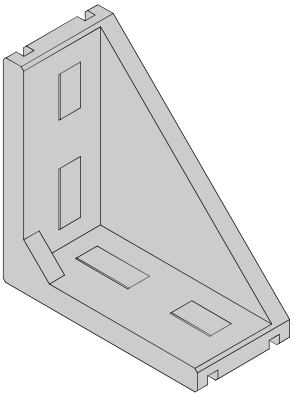

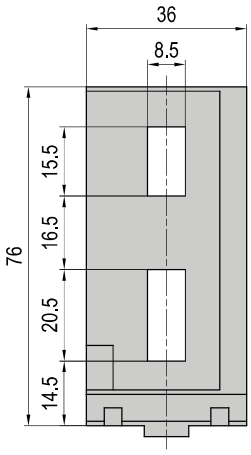

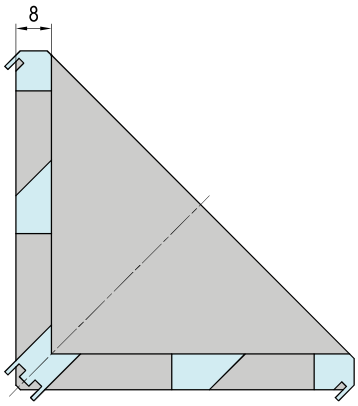

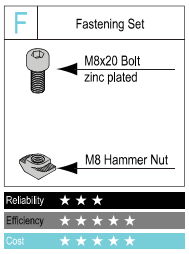

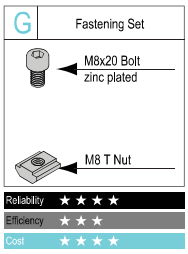

Description	Fastening Set	Mass (g)	Part No.
Die Cast Bracket-PG40-40x80 (pcs)	4xF/4xG	125	10.DCB.4080

Die Cast Bracket

Material : die cast aluminium alloy

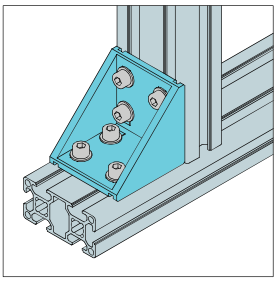

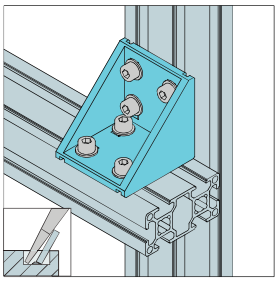

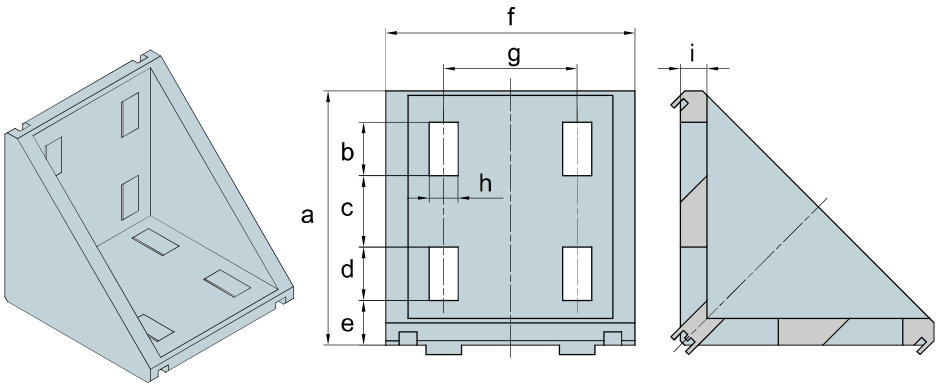

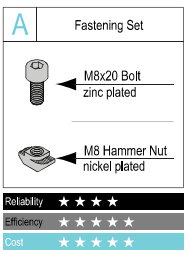

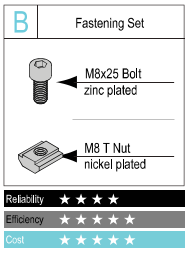

	Size									Fastening Set	Mass (g)	Part No.
Description	a	b	c	d	e	f	g	h	i			
Die Cast Bracket PG40- 8080	76	15.5	16.5	20.5	14.5	76	40	8.5	8	A/B	260	10.DCB.8080
Die Cast Bracket PG45- 9090	86	23.5	16.5	23.5	15.5	86	45	8.5	9	A/B	390	10.DCB.9090

Aluminium Angle

TYPE - A

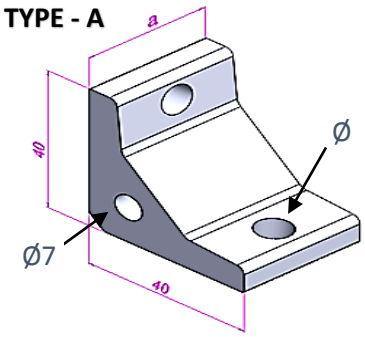

TYPE - B

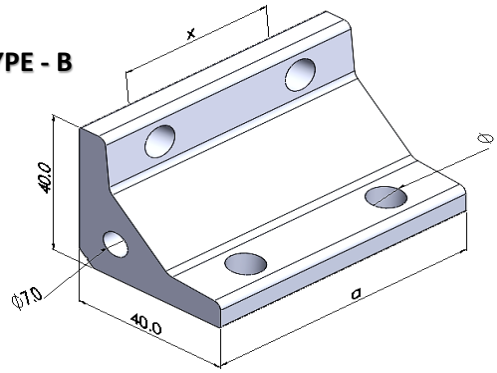

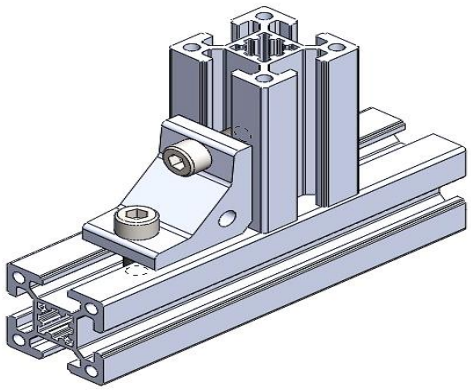

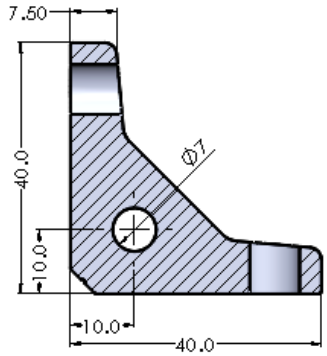

ØHole	Profile	Group	Part Code	Weight
5.5	20 X 20	20 Group	06.AA.2020	28 grams
6.5	30 X 30	30 Group	08.AA.3030	35 grams
6.5	30 X 60	30 Group	08.AA.3060	95 grams
8.5	40 X 40	40 Group	10.AA.4040	50 grams
8.5	40 X 80	40 Group	10.AA.4080	120 grams
8.5	45 X 45	45 Group	10.AA.4545	58 grams
8.5	45 X 90	45 Group	10.AA.4590	142 grams

	M6 X 16 Bolt. M6 Hammer Nut.	Type **A**
	M8 X 20 Bolt. M8 Hammer Nut.	Type **B**

Profile	Group	a	Type	x	Sheet Thickness
20 X 20	20 Group	15 mm	A	-	2/3 mm
30 X 30	30 Group	20 mm	A	-	4/6 mm
30 X 60	30 Group	50 mm	B	30	4/6 mm
40 X 40	40 Group	26 mm	A	-	6/8 mm
40 X 80	40 Group	66 mm	B	40	6/8 mm
45 X 45	45 Group	31 mm	A	-	6/8 mm
45 X 90	45 Group	76 mm	B	45	6/8 mm

Hidden Bracket

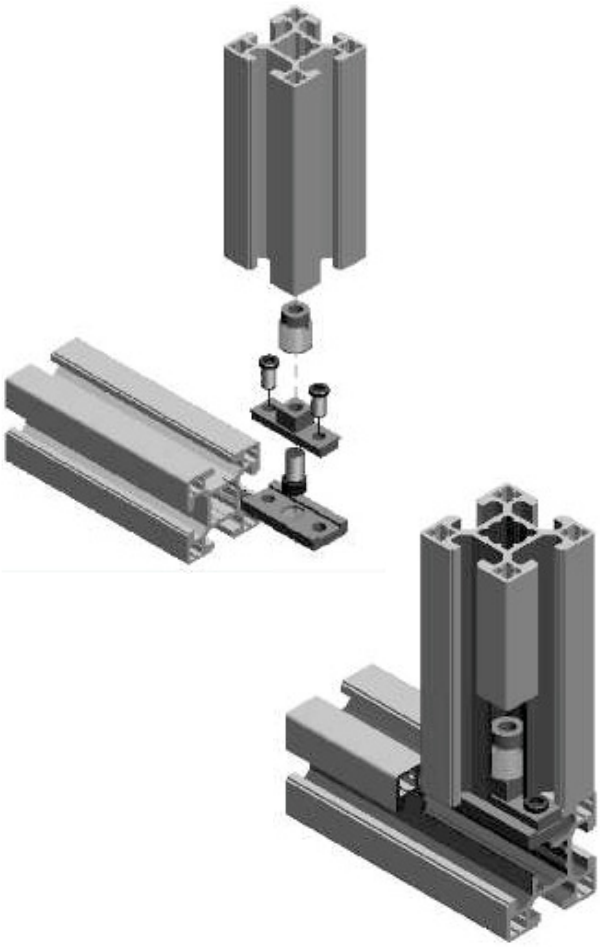

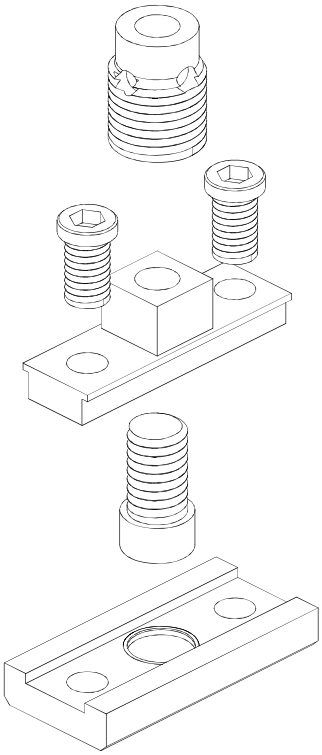

Description	Part No.
Hidden Bracket	08.HD.3030.S
Hidden Bracket	08.HD.3030.U
Hidden Bracket	10.HD.4040.S
Hidden Bracket	10.HD.4040.U
Hidden Bracket	10.HD.4545.S
Hidden Bracket	10.HD.4545.U
Hidden Bracket	10.HD.4080.S
Hidden Bracket	10.HD.4590.S

Quick Insert Set

Quick Insert Set can hide itself completely in aluminium profile bars, so its widely used to set up clean frames.

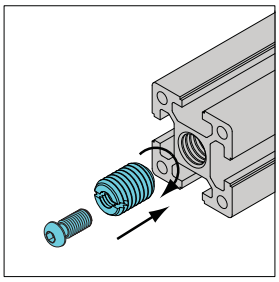

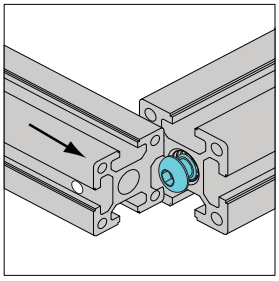

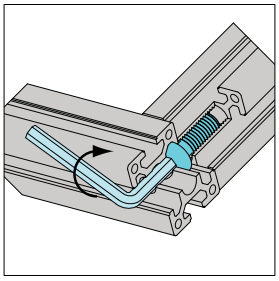

20 Group Quick Insert Set

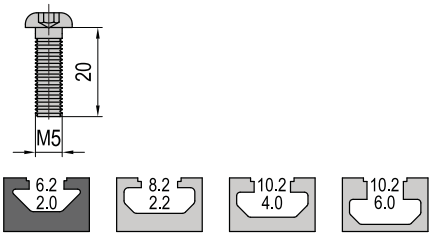

30 Group Quick Insert Set

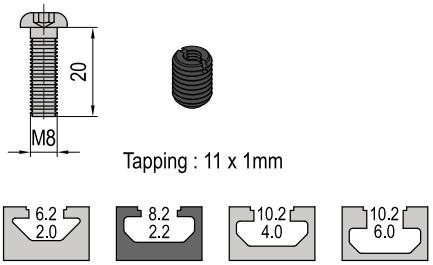

40 Group Quick Insert Set

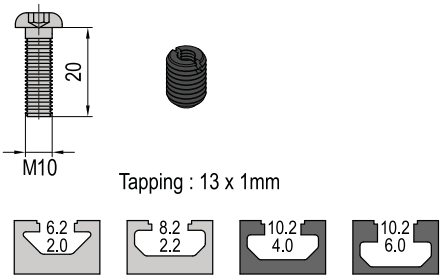

Description	Mass (g)	Part No.
20 Group Quick Insert set	4	06.QI.SET
30 Group Quick Insert set	13	08.QI.SET
40 Group Quick Insert set	25	10.QI.SET

Joint Angle

Joint Angle set (set screw pre installed)

Material : Nickel Plated steel for bracket
Nickel Plated steel for set screw

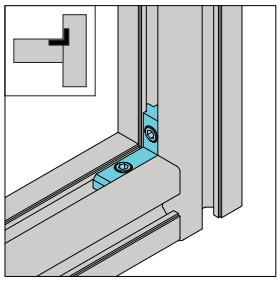

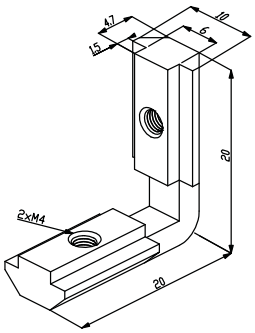

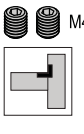

Joint Angle 6

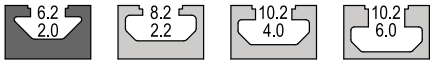

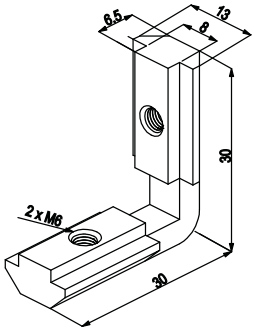

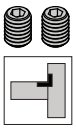

Joint Angle 8

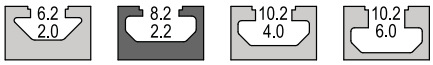

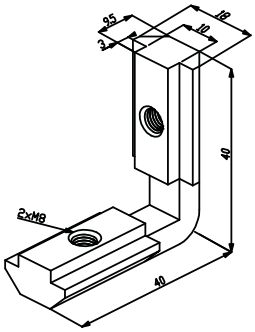

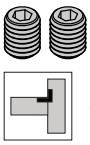

Joint Angle 10

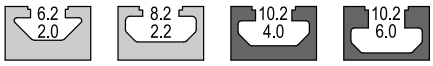

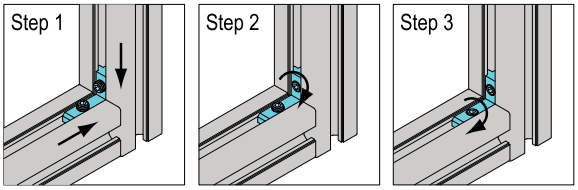

set parts in position | tighten L1 set screw | tighten L2 set screw

Description	Mass (g)	Part No.
Joint Angle 6-A (with set screw)	6	06.JA
Joint Angle 8-A (with set screw)	18	08.JA
Joint Angle 10-A (with set screw)	36	10.JA

Anchor Connector Standard

Material : zinc plated steel

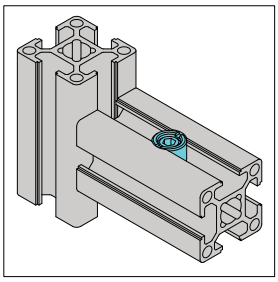

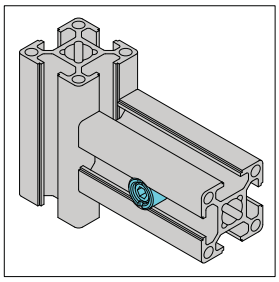

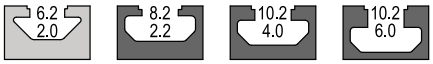

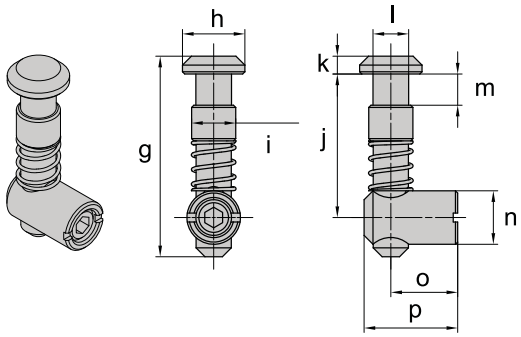

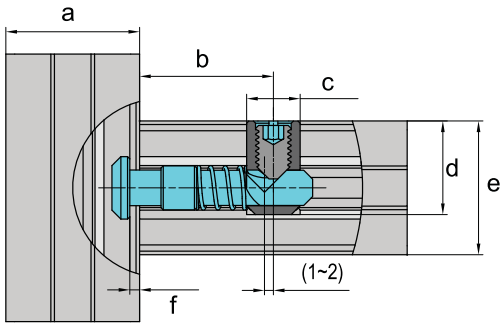

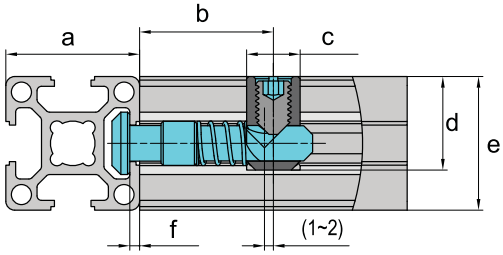

Description	Material	Mass (g/unit)	Part No.
Anchor Connector-PG30-Standard	zinc plated steel	39	08.AC.S
Anchor Connector-PG40-Standard	zinc plated steel	58	10.AC.S

	Size															
Item	a	b	c	d	e	f	g	h	i	j	k	l	m	n	o	p
Anchor Connector-PG30-Standard	PG30	30	Φ12	21	PG30	2.2	45	Φ14	Φ9.9	32.2	4	Φ8	7	Φ12	15	21
Anchor Connector-PG40-Standard	PG40	32	Φ15	27	PG40	4	52	Φ18	Φ11.9	36	5	Φ10	7	Φ15	20	27

Anchor Connector Universal

Material : zinc plated steel

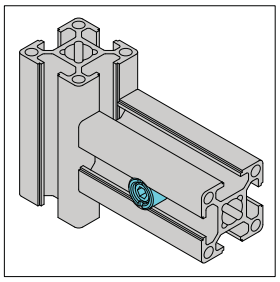

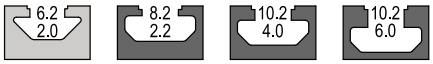

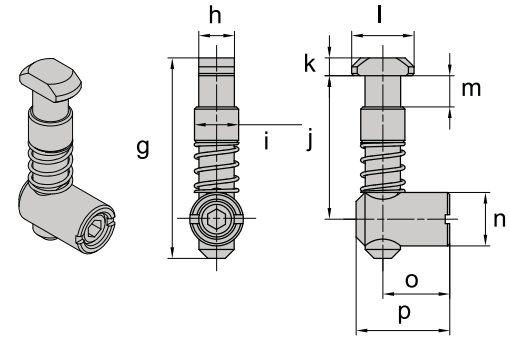

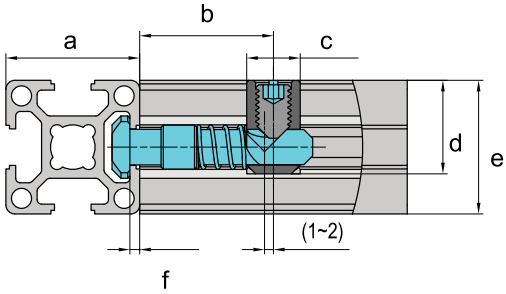

Description	Material	Mass (g/unit)	Part No.
Anchor Connector-PG30-Universal	zinc plated steel	38	08.AC.U
Anchor Connector-PG40-Universal	zinc plated steel	58	10.AC.U

	Size															
Item	a	b	c	d	e	f	g	h	i	j	k	l	m	n	o	p
Anchor Connector-PG30-Universal	PG30	30	Φ12	21	PG30	2.2	45	8	Φ9.9	32.2	4	Φ14	7	Φ12	15	21
Anchor Connector-PG40-Universal	PG40	32	Φ15	27	PG40	4	52	10	Φ11.9	36	5	Φ18	7	Φ15	20	27

3 Way Joint

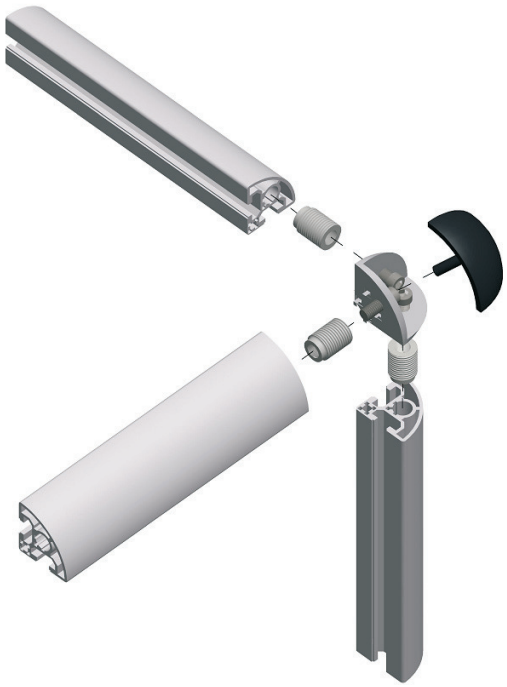

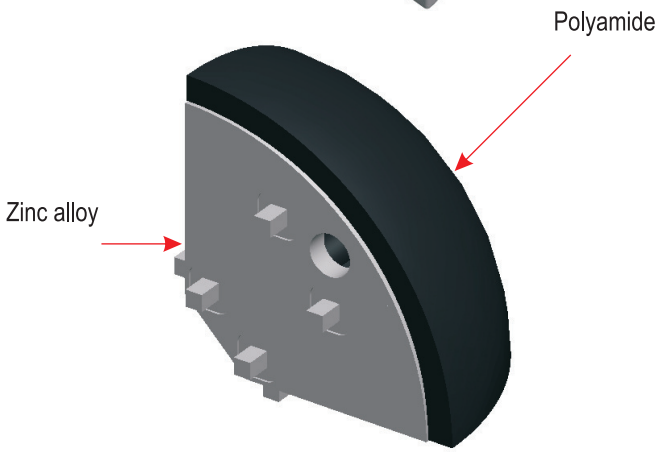

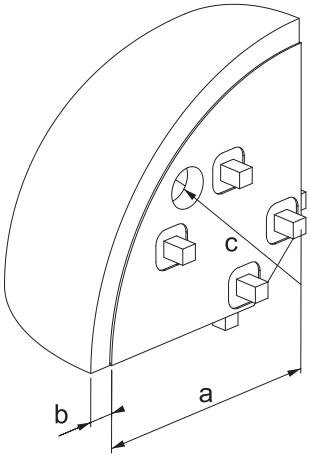

	Size		Part No.
Item	a	b	
3 Way Joint PG2020	19.0	1.0	06.3WJ.2020
3 Way Joint PG3030	28.5	1.5	08.3WJ.3030
3 Way Joint PG4040	38.0	2.0	10.3WJ.4040
3 Way Joint PG6060	56.5	3.5	10.3WJ.6060

One Way Angle Anchor Connector

Material : zinc plated steel

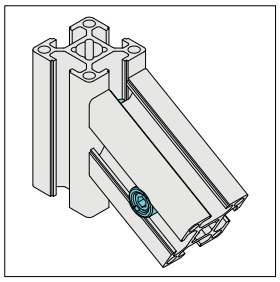

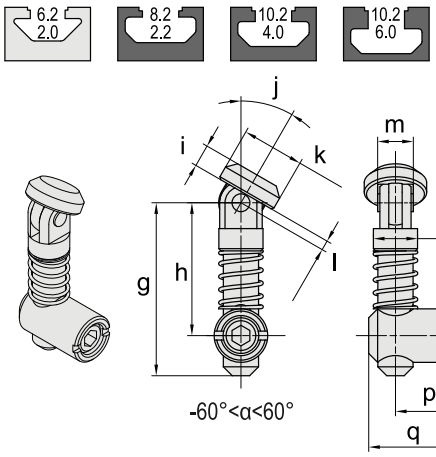

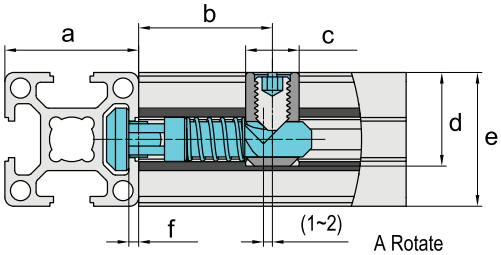

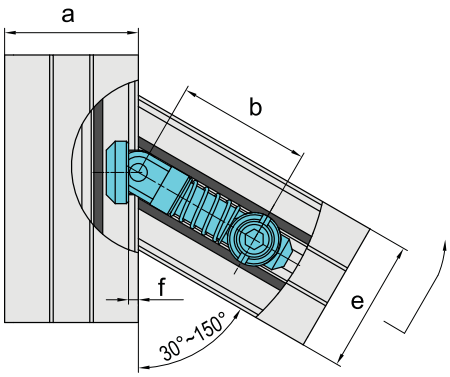

Description	Material	Mass (g/unit)	Part No.
One Way Angle Anchor Connector-PG30	zinc plated steel	55	08.OWAAC
One Way Angle Anchor Connector-PG40	zinc plated steel	72	10.OWAAC

	Size																
Item	a	b	c	d	e	f	g	h	i	j	k	l	m	n	o	p	q
One Way Angle Anchor Connector-PG30	PG30	30	Φ12	21	PG30	2.2	38.8	30	5	α	Φ14	2.2	8	Φ9.9	Φ12	15	21
One Way Angle Anchor Connector-PG40	PG40	32	Φ15	27	PG40	4	43	32	6	α	Φ18	4	10	Φ11.9	Φ15	20	27

Two Way Angle Anchor Connector

Material : zinc plated steel

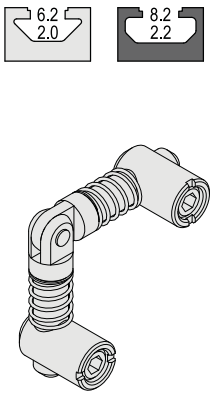

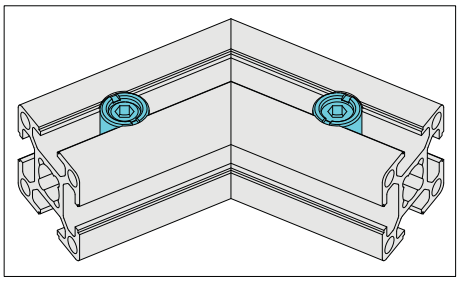

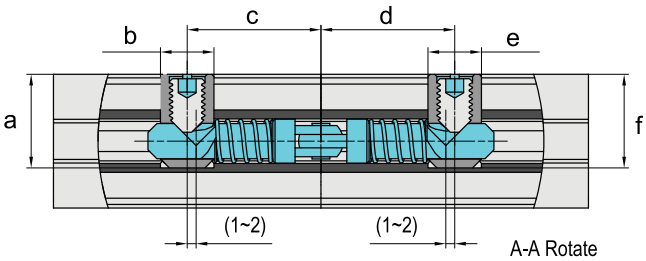

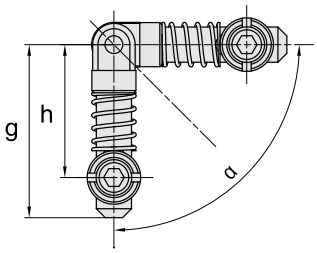

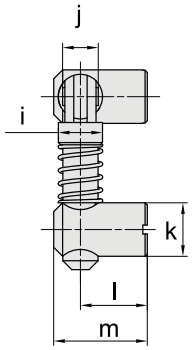

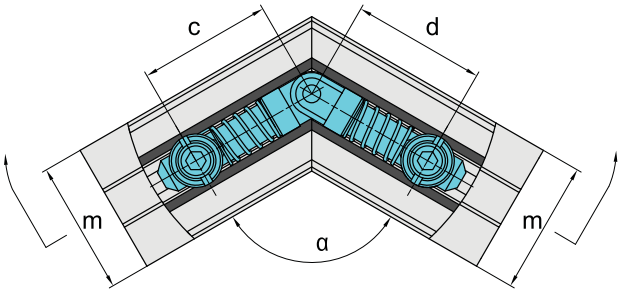

Description	Material	Mass (g/unit)	Part No.
Two Way Angle Anchor Connector-PG30	zinc plated steel	63	08.TWAAC
Two Way Angle Anchor Connector-PG40	zinc plated steel	97	10.TWAAC

	Size														
Item	a	b	c	d	e	f	g	h	i	j	k	l	m	n	m
Two Way Angle Anchor Connector-PG30	21	Φ12	30	30	Φ12	21	38.8	30	Φ9.9	8	Φ12	15	21	60º~180º	PG30
Two Way Angle Anchor Connector-PG40	27	Φ15	32	32	Φ15	27	43	32	Φ11.9	10	Φ15	20	27	60º~180º	PG40

Insert

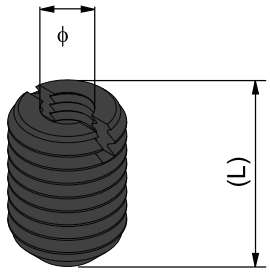

Description	TAP	L(mm)	ϕ (mm)	Part No.
PG30 Insert	11x1mm	12	M5	08.IN.M5
PG30 Insert	11x1mm	12	M6	08.IN.M6
PG30 Insert	11x1mm	12	M8	08.IN.M8
PG40 Insert	13x1mm	16	M5	10.IN.M5
PG40 Insert	13x1mm	16	M6	10.IN.M6
PG40 Insert	13x1mm	16	M8	10.IN.M8
PG40 Insert	13x1mm	16	M10	10.IN.M10

Core Reducer

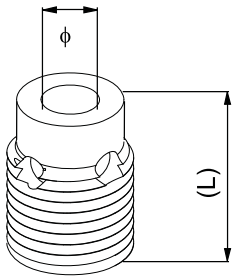

*Tapping not required

Description	L (mm)	Ø (mm)	Part No.
PG30 Core Reducer	16	M5	08.CR.M5
PG40 Core Reducer	20	M5	10.CR.M5
PG40 Core Reducer	20	M6	10.CR.M6

Tap

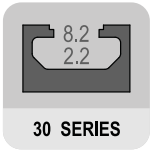

PART NO.

TAP.11x1

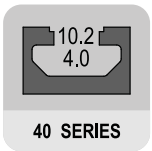

PART NO.

TAP.13x1

Joint Bar

Material : zinc plated steel for bar and set screw.

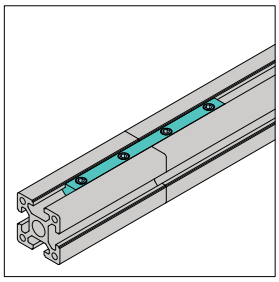

Linear Bar Connector-8

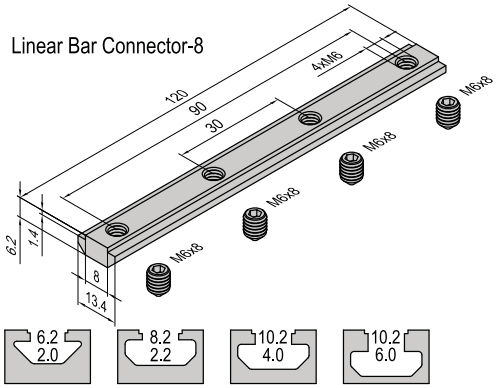

Linear Bar Connector-10

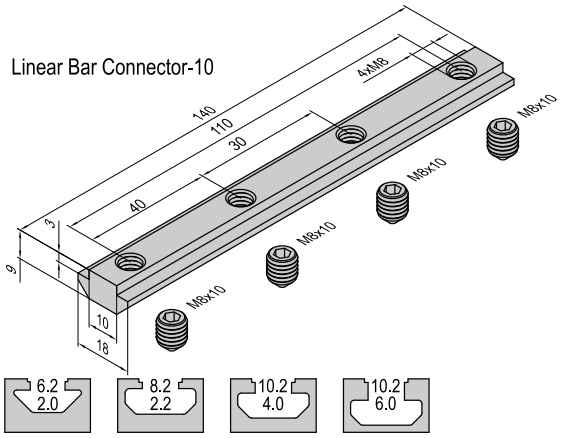

Description	Mass (g)	Part No.
Joint Bar - 8 (with set screw)	65	08.JB
Joint Bar - 10 (with set screw)	132	10.JB

SICA INDIA

Head Office :
H2, Globe Complex, Anjur Road, Ovli Village, Bhiwandi, Thane 421 302,
Maharashtra INDIA. Customer care : +91 809 704 8513
email : **info@sica.in**; Web : **www.sica.in**